DFMN / DFMF

HYDROCYCLONE SEPARATOR FILTER

Hydrocyclone separator is a continuously device that utilizes centrifugal force to remove suspended particles from any flow stream of water where the specific gravity (density) of the particle(s) is heavier than the fluid. The liquid enters the equipment tangentially and creates a centrifugal flow. The special inlet at the top accelerates the centrifugal flow. The centrifugal force moves particles to the side of the separator chamber. The solid slowly falls down the sides to the collection chamber. The clean fluid flows up through the vortex to the exit. The solids collection chamber is either periodically or continuously purged. The automatic flushing system is controlled by means of an electric ball valve and controller. This automatic cleaning eliminates the need for routine maintenance. Models are also available with pneumatic or manual controls.

FEATURES

- Designed to operate continously with no routine shutdown for cleaning or maintenance.
- No need for any by-pass
- No need to maintenance
- No parts to replace
- Special coatings for corrosion resistance
- CE Marking accordance to PED 2014/68/EU harmonized standard.

BENEFITS

- No Interruption of flow during the purging
- Very low water loss during cleaning
- Reduction of the installation costs
- No cost for general or periodical maintenance.
- Ideal for Seawaterapplications

APPLICATIONS

- Seawater intake
- Injection water
- Power Plants
- Cooling water
- Surface water intake
- Geothermal energy
- Process water
- Pre filtration RO
- Frac fluids
- Pipeline flushing
- Waste water

Contact
Dutch Filtration BV
Vrijheidweg 61
1521 RP, Wormerveer
The Netherlands
+31 (0)75 201 40 00
info@dutchfiltration.com
www.dutchfiltration.com

SPECIFICATIONS HYDROCYCLONE SEPARATOR FILTER

Design Specifications	
Minimum design pressure	15 psi (1 bar)
Maximum design pressure	145 psi (10 bar), 232 psi (16 bar) or higher upon request
Max. working temperature	194 °F (90 °C)
Materials	
Material	Carbon Steel, Stainless Steel 304, 316 or Special materials on request

DFMN SERIES

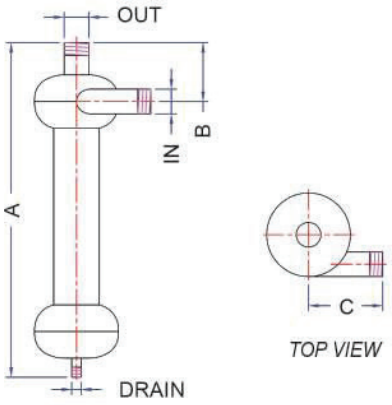

Filtertype DFMN	Inlet/Outlet	Capacity (m3/h)	Drain	Weight (kg)	A	B	C
DFMN3/4	3/4"	1-4	3/4"	8	600	110	130
DFMN 1	1"	2-7	1"	9	690	110	130
DFMN 11/4	1 1/4"	7-10	1"	14	760	125	165
DFMN 11/2	1 1/2"	10-16	1"	15	760	130	170
DFMN 2	2"	16-24	1"	19	860	135	175

DFMF SERIES

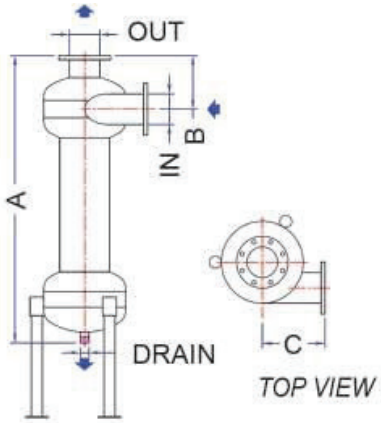

Filtertype DFMF	Inlet/Outlet	Capacity (m3/h)	Drain	Weight (kg)	A	B	C
DFMF21/2	2 1/2"	24 - 35	1"	24	880	155	195
DFMF3	3"	35 - 65	1"	33	1040	175	215
DFMF4	4"	65 - 90	1"	48	1120	200	260
DFMF5	5"	90 - 110	1 1/4"	60	1355	245	270
DFMF2	2"	110 - 200	1 1/4"	160	1760	285	345
DFMF8	8"	200 - 380	1 1/4"	295	2260	365	435
DFMF10	10"	375 - 700	1 1/2"	410	2930	510	545
DFMF12	12"	560 - 900	2"	640	4020	585	610
DFMF14	14"	650 -1200		650			
DFMF16	16"	860 - 1600		660			
DFMF18	18"	110 - 2000		675			

DFMFLP SERIES

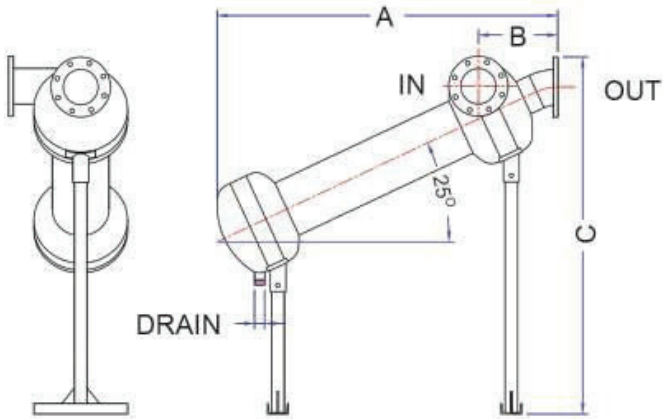

Filtertype DFMFLP	Inlet/Outlet	Capacity (m3/h)	Drain	Weight (kg)	A	B	C
DFMFLP4	4"	65 - 90	1"	48	1160	300	1400
DFMFLP5	5"	90 - 110	1 1/4"	60	1290	350	1470
DFMFLP6	6"	110 - 200	1 1/4"	160	1640	380	1692
DFMFLP8	8"	200 - 380	1 1/4"	295	2215	490	1975
DFMFLP10	10"	375 - 700	1 1/2"	410	2695	585	2307
DFMFLP12	12"	560 - 900	2"	640	3875	850	2910

DFMFRD SERIES

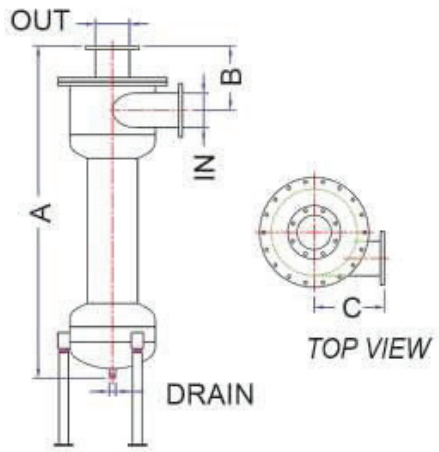

Filtertype DFMFRD	Inlet/Outlet	Capacity (m3/h)	Drain	Weight (kg)	A	B	C
DFMFRD21/2	21/2"		1"	24	1060	210	220
DFMFRD3	3"		1"	33	1245	230	275
DFMFRD4	4"	65 - 90	1"	48	1315	300	250
DFMFRD5	5"	90 - 110	1 1/4"	60	1465	300	300
DFMFRD6	6"	110 - 200	1 1/4"	160	1930	375	375
DFMFRD8	8"	200 - 380	1 1/4"	295	2405	410	450
DFMFRD10	10"	375 - 700	1 1/2"	410	3055	555	500
DFMFRD12	12"	560 - 900	2"	640	4040	520	610

DFMFLP/RD SERIES

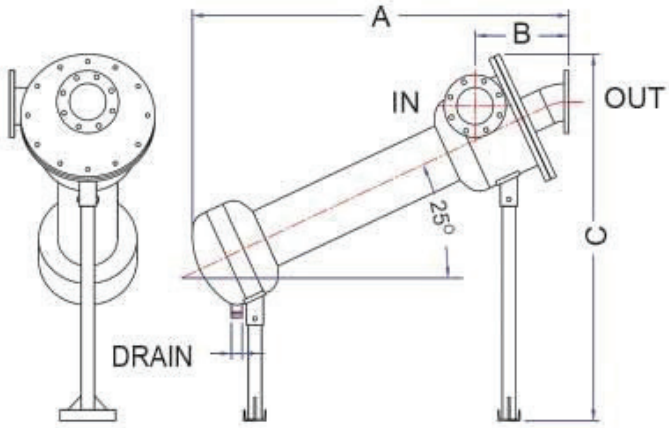

Filtertype DFMFLP/RD	Inlet/Outlet	Capacity (m3/h)	Drain	Weight (kg)	A	B	C
DFMFLP/RD4	4"	65 - 90	1"	48	1210	300	1470
DFMFLP/RD5	5"	90 - 110	1 1/4"	60	1370	375	1511
DFMFLP/RD6	6"	110 - 200	1 1/4"	160	1730	400	1816
DFMFLP/RD8	8"	200 - 380	1 1/4"	295	2250	525	2090
DFMFLP/RD10	10"	375 - 700	1 1/2"	410	2830	650	2405
DFMFLP/RD12	12"	560 - 900	2"	640	3850	750	2990

ORDERING CODE

Type	Inlet /Outlet inches
DFMN	3/4, 1, 11/4, 1 1/2, 2
DFMF	21/2, 4, 5, 6, 8, 10, 12, 14,16, 18
DFMFLP	4, 5, 6, 8, 10, 12
DFMFRD	21/2, 3, 4, 5, 6, 8, 10, 12
DFMFLP/RD	4, 5, 6, 8, 10, 12

OPTIONAL

- Special coatings for corrosion resistance
- Available in stainless steel 304, 316L, Super Duplex and titanium
- Available in ASME Section VIII Division 1 design with "U" Stamp
- Available with ATEX certificate requirements

PERFORMANCE GRAPHIC

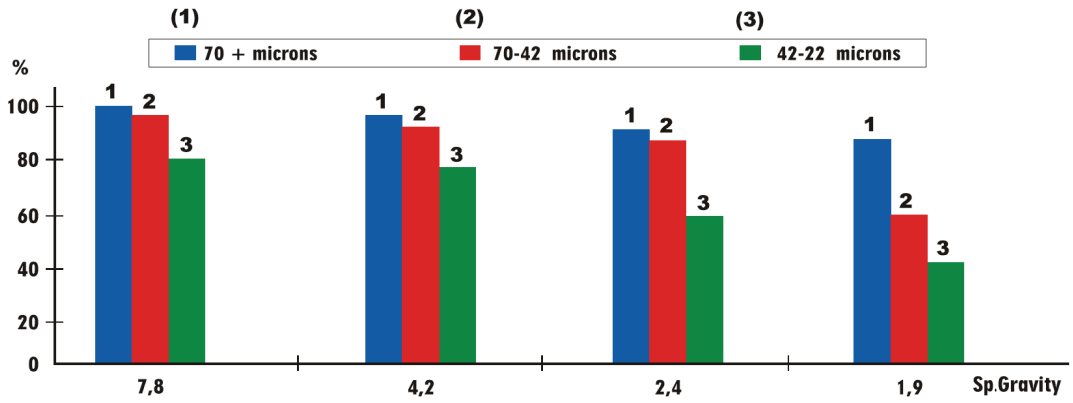

CAPACITY VS PRESSURE DROP GRAPHIC